VISTA FRONTALE

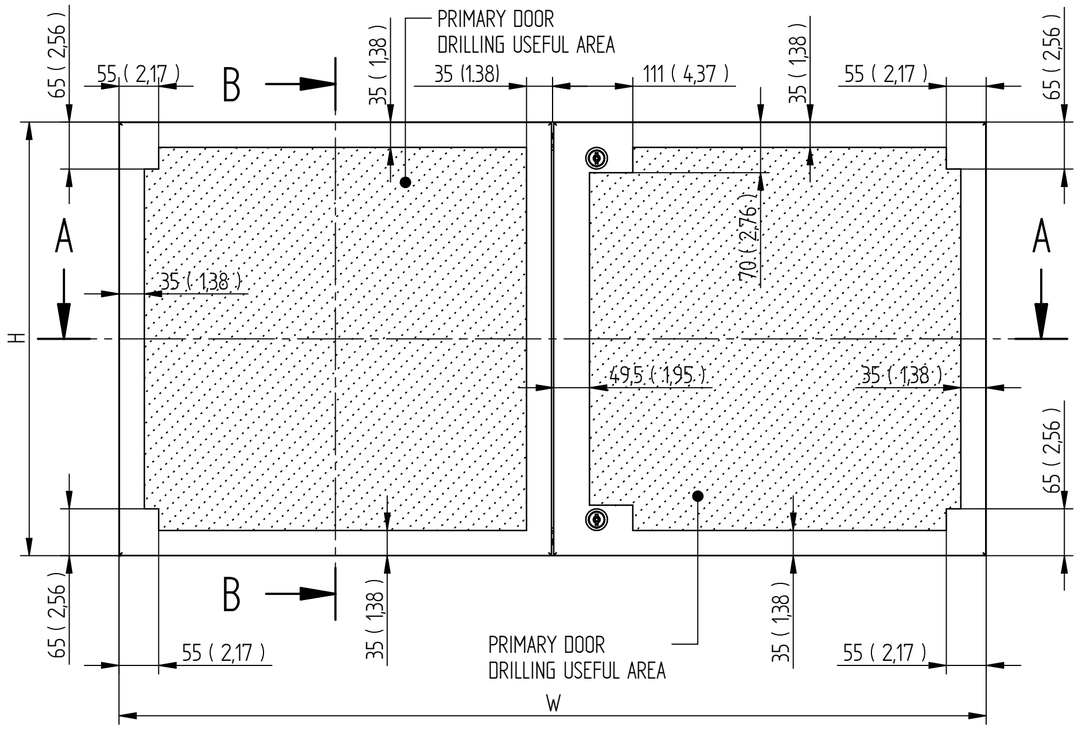

REAR VIEW

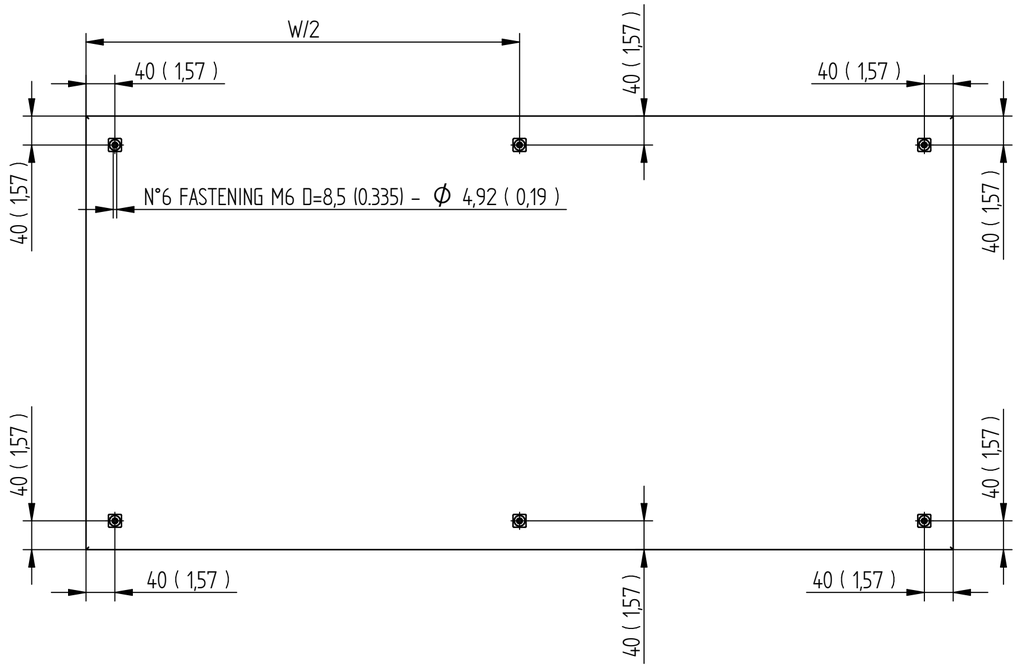

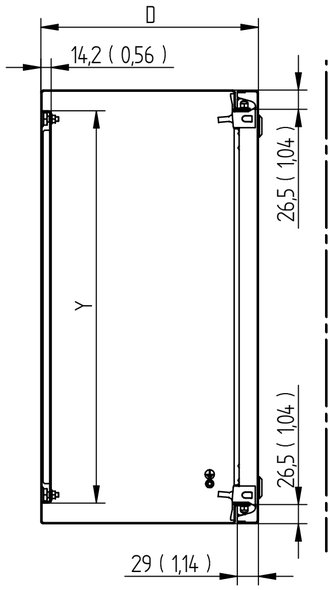

SECTION B-B

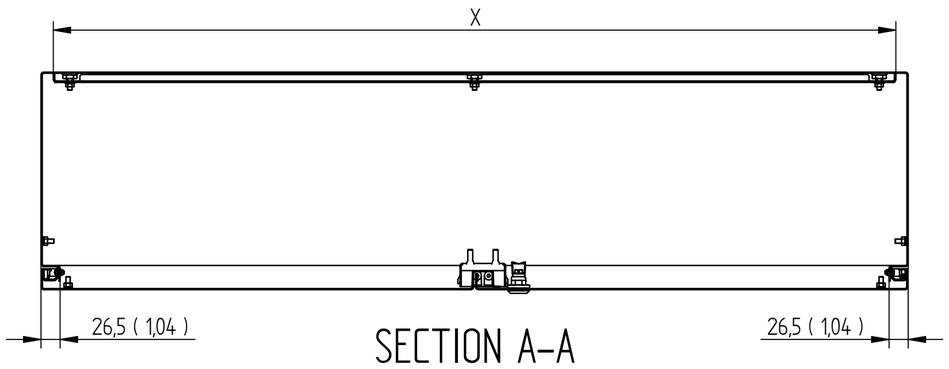

SECTION A-A

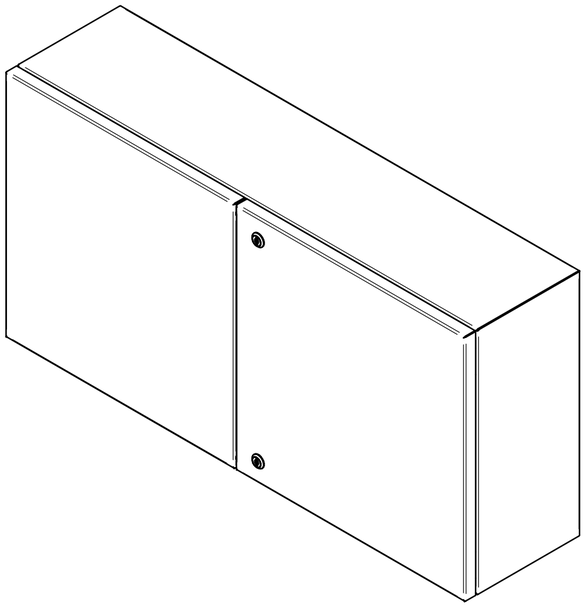

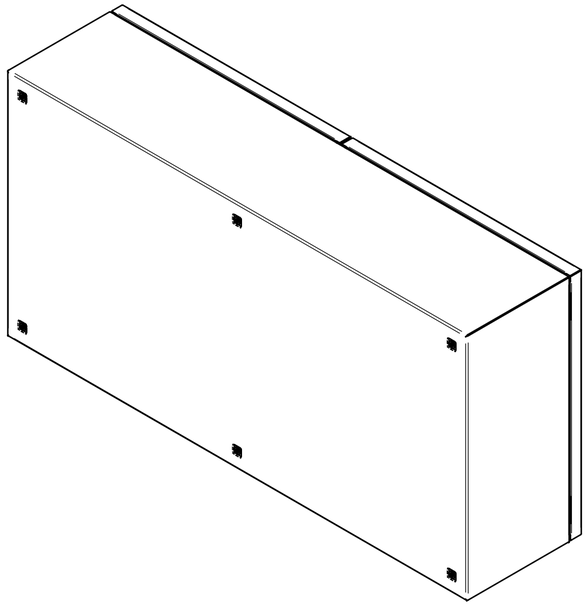

	EXTERNAL DIMENSIONS			WIRING PLATE		FEATURES		
ITEM CODE	**W**	**H**	**D**	**X**	**Y**	**NR. CLOSING POINTS**	**NR. FIXING POINTS**	**NR. HINGES**
UNIT	**mm / inch**	**mm / inch**	**mm / inch**	**mm / inch**	**mm / inch**			
CPN1206030_2P	1200 / 47.24	600 / 23.62	300 / 11.81	1166 / 45.91	543 / 21.38	2	6	2
CPN1208030_2P	1200 / 47.24	800 / 31.5	300 / 11.81	1166 / 45.91	743 / 29.25	2	6	3
CPN10010030_2P	1000 / 39.37	1000 / 39.37	300 / 11.81	943 / 37.13	966 / 38.03	2	6	3
CPN10012030_2P	1000 / 39.37	1200 / 47.24	300 / 11.81	943 / 37.13	1166 / 45.91	2	6	3

STANDARD POSITIN OF PRIMARY DOOR ON RIGHT

Description
DOUBLE SOLID DOOR CABINETS CPN SERIES
mm (inch)

Technical data sheet code
SCTEC.CPN2P.EN

Issue 03

Date 28/05/2025

SHEET 1 OF 1

MPGAMMA